Jacklegs shown for reference only.
Check order prior to manufacture.

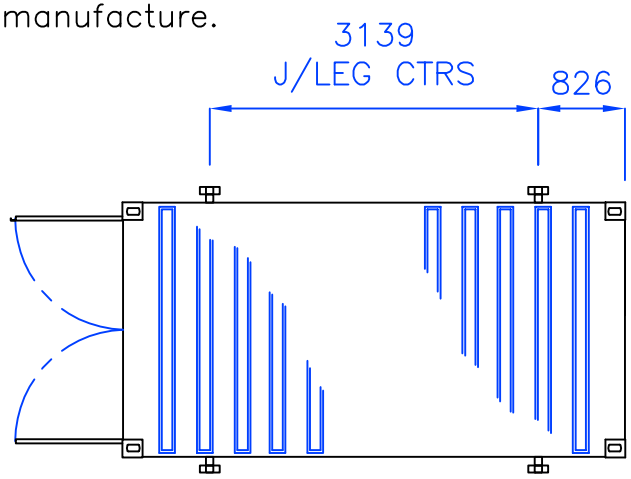

PLAN VIEW

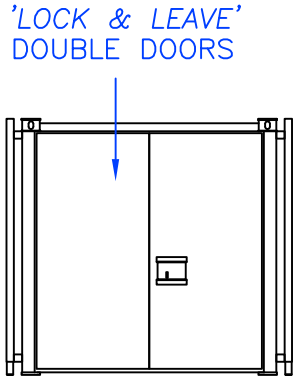

DOOR END

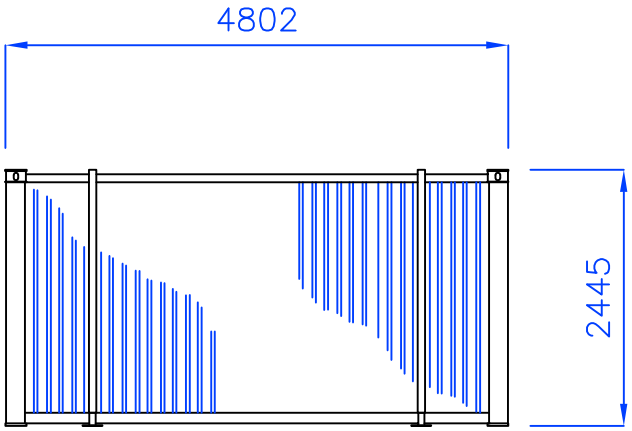

SIDE ELEVATION

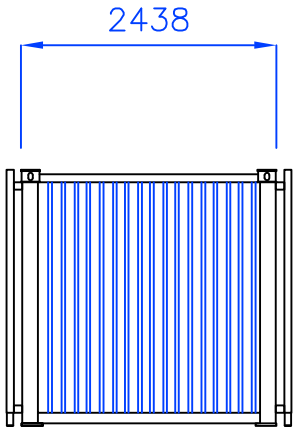

FIXED END

KEY TO SYMBOLS

APPROVAL BOX
Customer:
Signature:
Name:
Date:

ISSUE	DATE	DESCRIPTION
1	14/5/01	FIRST ISSUE

TITLE Termspace
16'x8' Steelstore

DRAWN	PB	DATE	14/5/01	DRG. No.
APPROVED		DATE		TER_SS1608V01
CHECKED				